Multi-Sample In Situ Filtration System from Deep Sea Thermal Vents

Authors:
Paul Spencer (Delaware Tech. Mechanical Design)
Tyler Davidson (Delaware Tech. Electrical Engineering Technology)

Advisors:
George W. Luther, III Ph.D.
Doug Hicks Ph.D.
Brent Mitchell M.S.

Overview

- Project objective and specifications
- Fluid Path Diagram
- Solenoid pinch valve design and testing
- Pinch valve assembly design
- Protective box design and fabrication
- Mounting frame design and fabrication
- Summary

Project Objective

- To design and manufacture a semi-automated electromechanical system to collect samples in situ from hydrothermal vents.
- The samples will be used to study nanoparticle concentration and composition in an effort to better understand climate change.
- To collect more accurate samples by filtering on location.

Previous studies conducted at Mid Atlantic Ridge hydrothermal vents

Filtration System Specifications

- Capable of taking samples at 3500 meters deep near hydrothermal vents
- Filter in series at 10, 2 and 0.2 microns
- Collect 3 separate filtration samples during a single deployment
- Be remotely operated through the Jason ROV

Fluid Path Diagram

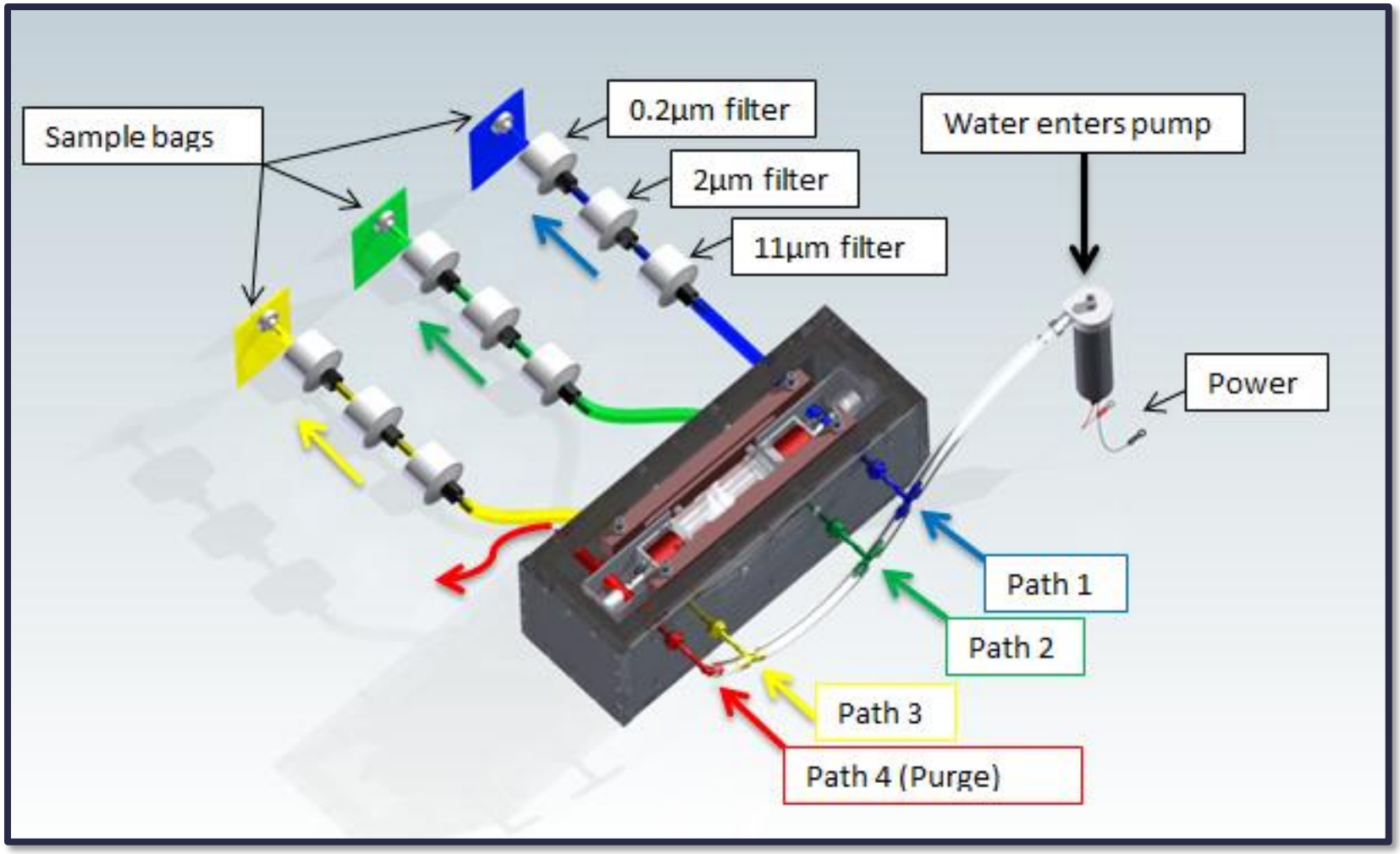

Above is a color coded model illustrating the water flow through each path of the system. The water flows into the pump, through one of the four solenoids and into the desired filters. When the water has passed through all three filters it is then collected in a sample bag for examination.

Solenoid Pinch Valve Design

- Problem:
  - No commercially available solenoid pinch valves capable of operating in seawater at 3500 meters
- Solution:
  - Design and fabricate a spring loaded pinch valve using a standard linear solenoid
  - Encase it in a mineral oil filled housing with a pressure equalization port to protect it from seawater

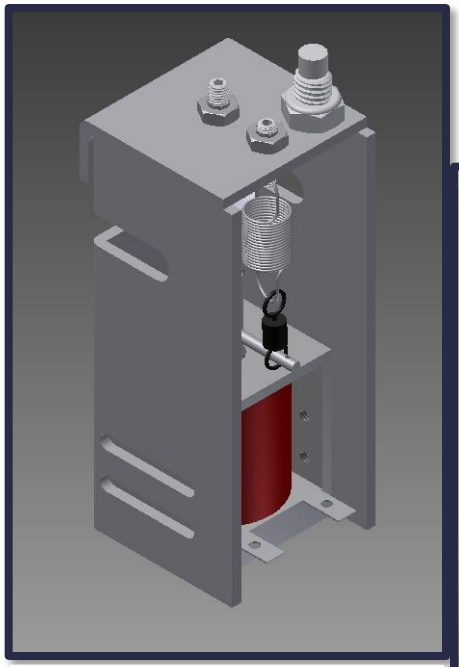

3D CAD Model

Finished Assembly

Solenoid Pinch Valve Testing

- Problem:
  - Linear solenoid maximum pull = 5 lb , not sufficient to stop flow in thick walled tubing
- Solution:
  - Switch to a more supple tubing with a smaller inside diameter and wall thickness
  - Flow Coefficient (Cv) calculation determined that smaller tubing would not impede flow relative to the pressure drop in the filter string. (Tubing Pressure drop = $2.8*10^{-4}$ psi << feed pump 4 psi)
    - flow coefficient = flow rate * $(\text{pressure drop})^{1/2}$
    - $Cv = Q\ (\Delta P)^{1/2}$

Solenoid Pinch Valve Testing cont.

Hysteresis Testing

- To determine if tube will reopen after extended periods of closure (pinch valve is “normally closed”)
- Tested Nalgene and Silicone tubing
- Tubing loaded with pinch anvil for 19 days
- Tubing’s return to open after loading:
  - Silicone - 93% open after 5 min.
    Vinyl - 75% open after 5 min
    77% open after 15 min
    78% open after 20 min
- Conclusion: Both Vinyl and Silicone recover adequately. Vinyl chosen for ease of chemical cleaning.

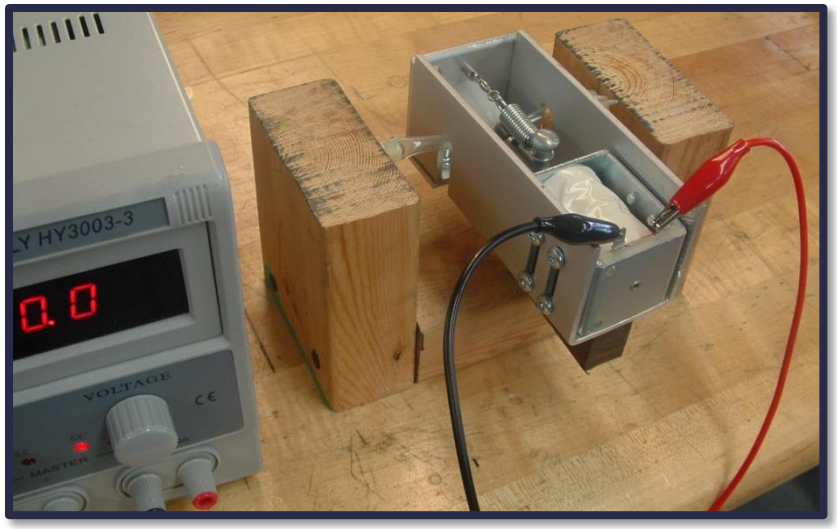

Solenoid Pinch Valve Testing cont.

Pressure Chamber Testing

- Pinch Valve required testing to verify the following working conditions for system:
  - Compatible with Mineral Oil
  - Pressure: 1atm and 20atm
  - Temperatures: 2°C and 25°C
- Pressure chamber designed and fabricated
- The Pinch Valve was found to operate without any problems under all test conditions

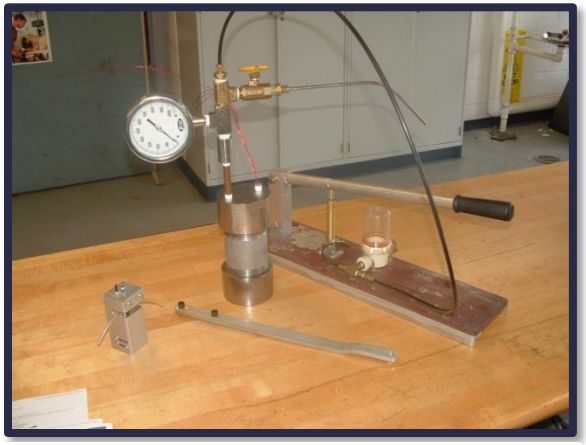

Pump courtesy of CHPT Manufacturing Inc.

Pinch Valve Assembly Design

- Challenge:
  - To provide three separate filter samples and a purge/waste by-pass with only one feed pump
- Solution:
  - Use four pinch valves with controls routed to the Jason
  - Nothing was commercially available so a custom mounting frame and wiring system was designed and fabricated

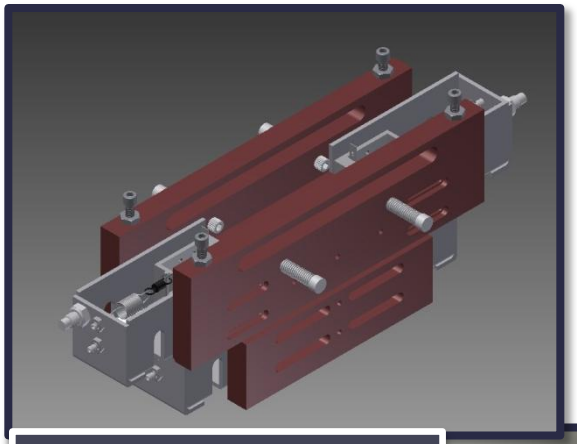

3D CAD Model

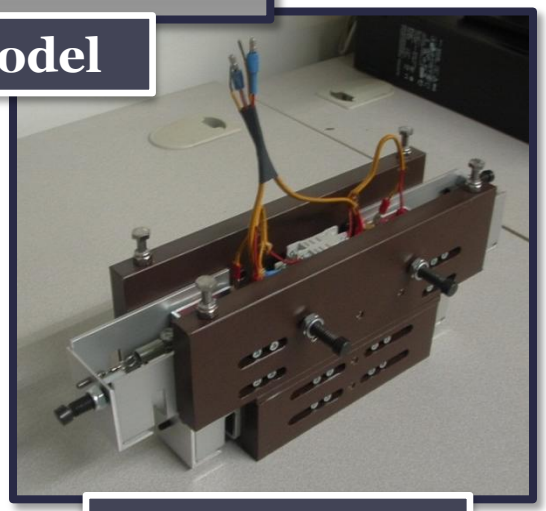

Finished Assembly

Oil Filled Isolation Box Design

- Problem:
  - The pinch valves need to be isolated from the seawater in a non-conducting, chemically compatible liquid
  - Designing and fabricating a box to house the solenoids by deadline with a limited budget
- Solution:
  - Use a commercially available watertight Pelican box modified to provide 8 – tube ports, electrical power & controls, fill/drain and pressure equalization diaphragm

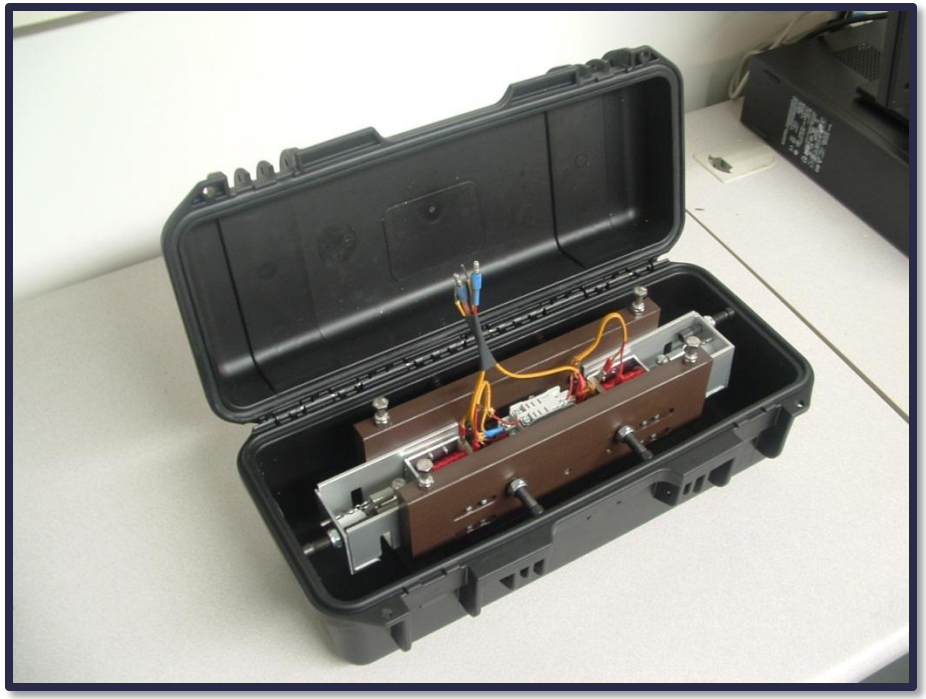

Oil Filled Isolation Box Fabrication

- Problems:
  - Building a pressure chamber and porting in/out was not an option for deployment at 3500 meters
  - Machining on a non-rigid structure with an uneven and tapered surfaces
- Solutions:
  - Allowing oil filled isolation box to equalize with external pressure
  - Install a flexible rubber “window” in the wall of the box
  - Build custom holding fixtures

Fiberglass Mounting Frame Design

Criteria

- Non-corrodible
- Relatively Incompressible
- ‘Solid’ material (no opened-cell)
- Rigid
- Lightweight
- Hold down Pelican box lid w/ downward pressure
- Provide mounting for:
  - Millipore filter holders
  - Collection bags
  - Pump
  - Deployment T-handle for sample tube

Summary

- Project status and proven components:
  - Priming procedures and general operation demonstrated to end users
  - Solenoid pinch valve assemblies have been tested to 300psi and 20° C
  - Oil filled isolation box has been tested and confirmed to be watertight.
  - The solenoid Pinch valves dependably open and close to control pump flow to sample filters.
  - The fiberglass frame has proven to be a “user friendly” and secure mount for all system components.
  - The overall operation of the system has been confirmed by a shallow salt water submersion test.
  - Next step – full deployment

Final Assembly