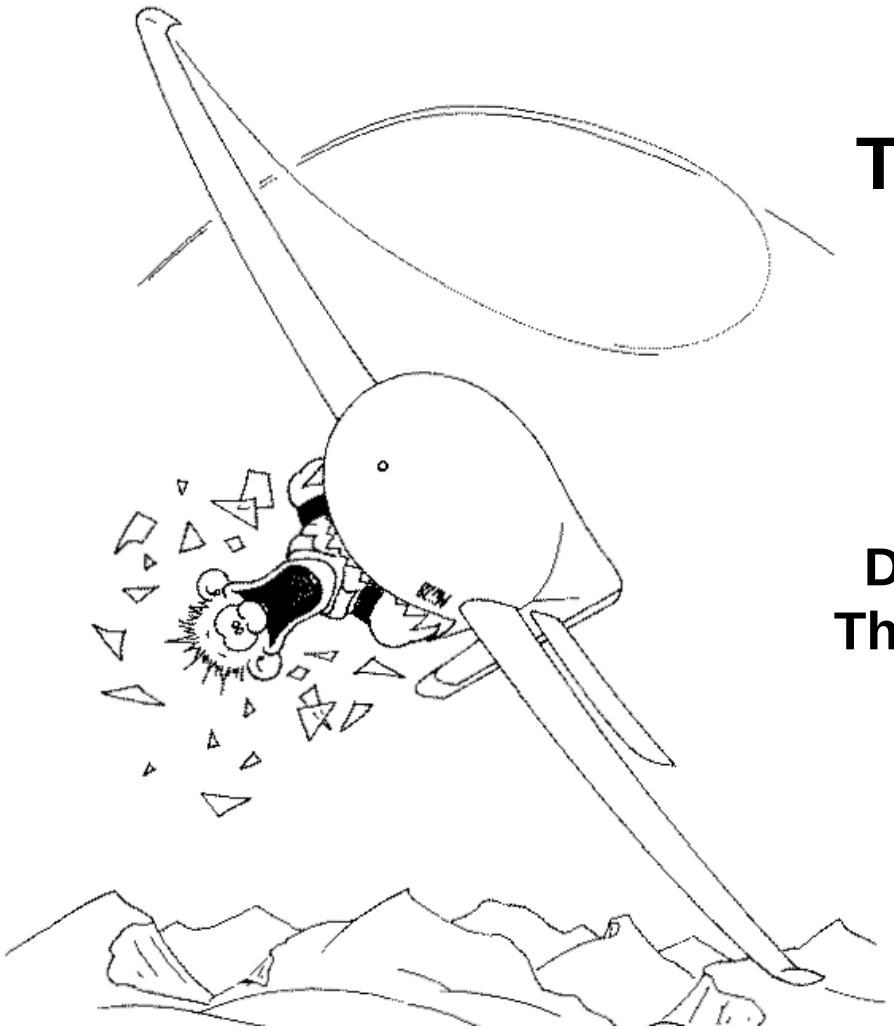

The First Two Decades: Akaflieg Penn State

Professor Mark D. Maughmer
Dept. of Aerospace Engineering
The Pennsylvania State University

Pedagogical Approach

Classical theoretical methods
vs.
Canned analysis programs and tools

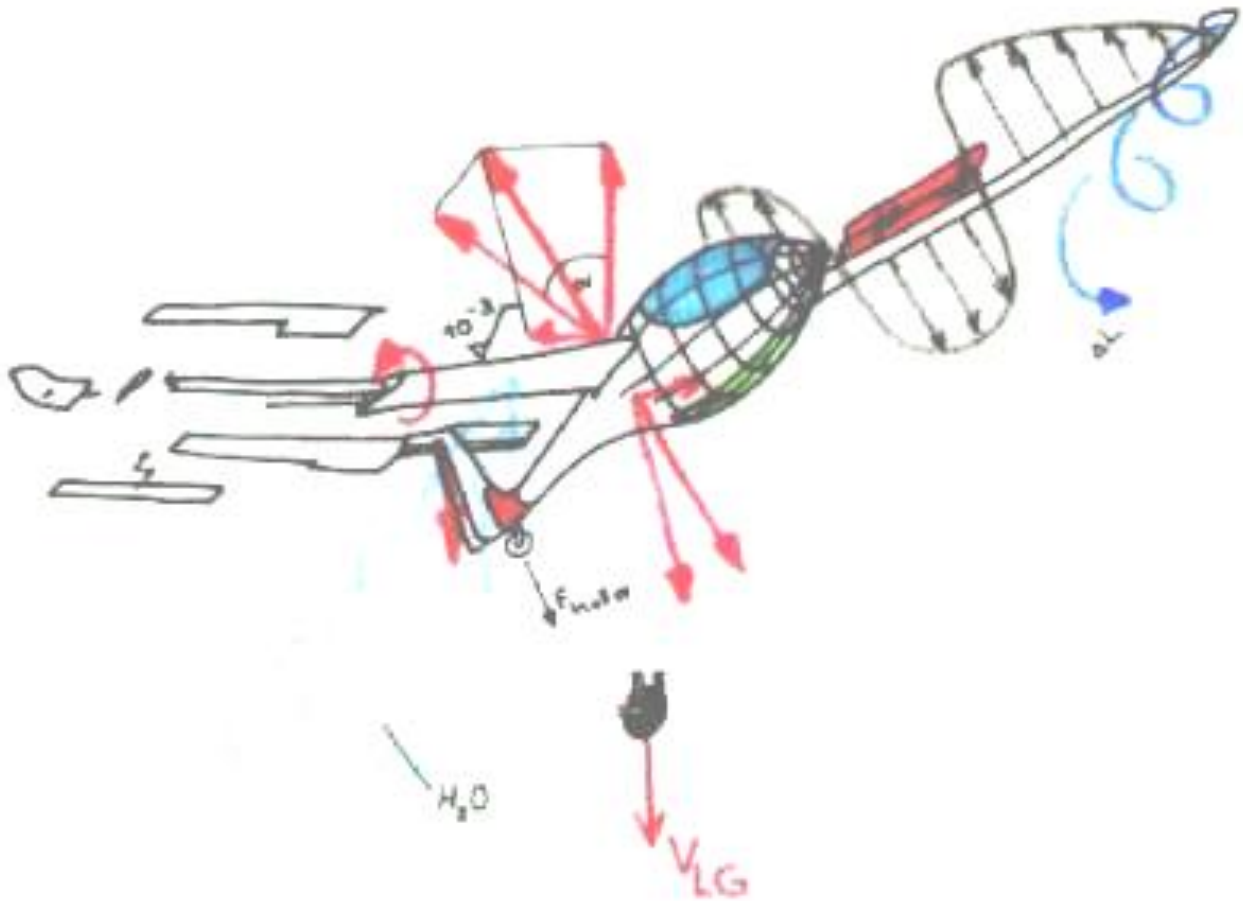

A Curriculum Alternative:

The Flight Vehicle Design and Fabrication Course

Freshman through seniors together in a “one-room schoolhouse” environment

Learning is largely student initiated and directed

Course Goals

Provide a “hands-on” experience for aerospace engineering students

Give students a team-building experience in design that is vertically and horizontally integrated

Motivate students to pursue an engineering education

Motivate coursework

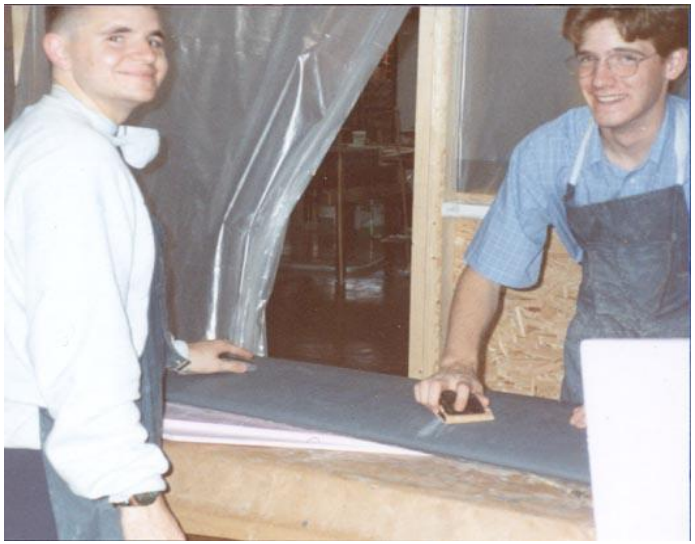

Vampyr, 1921
Akaflieg Hannover

Modeled after German Akafliegs
-adapted to US educational system

SB-14, 2010
Akaflieg Braunschweig

Phoenix, 1957
Akaflieg Stuttgart

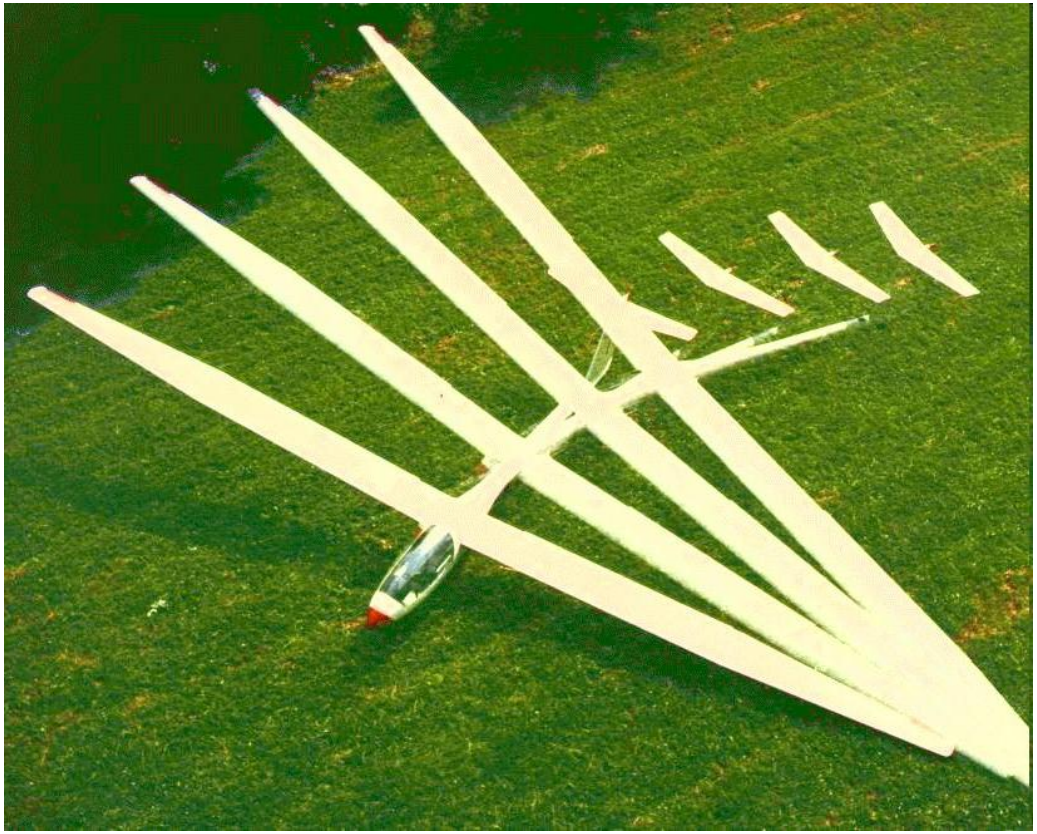

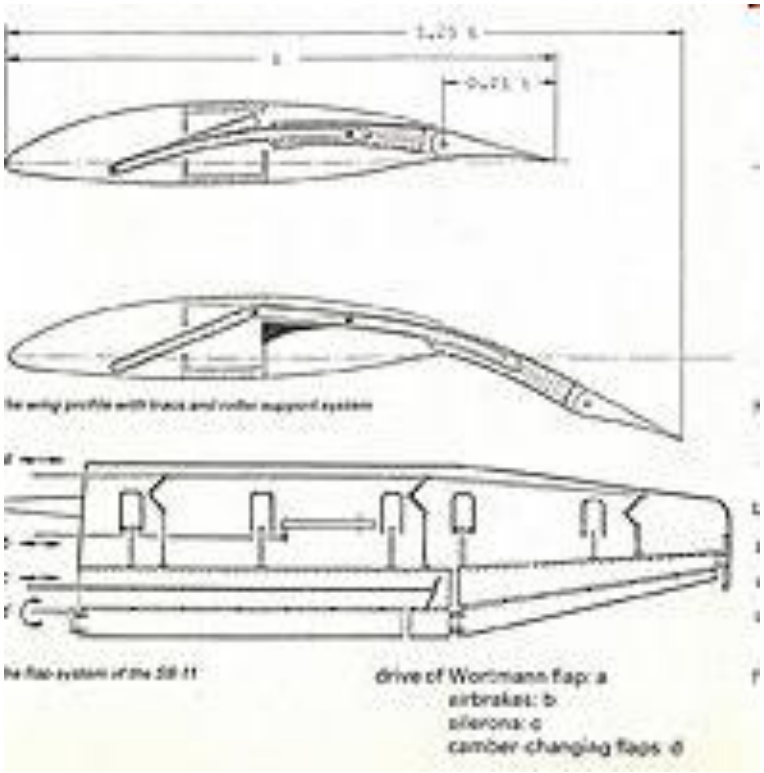

Variable Span, FS-29
Akaflieg Stuttgart, 1972

Variable Chord, SB-11
Akaflieg Braunschweig

The Akaflieg Concept (?)

SB-10, 1974
Akaflieg Braunschweig

New gliders
New airfoils
New materials
New manufacturing methods

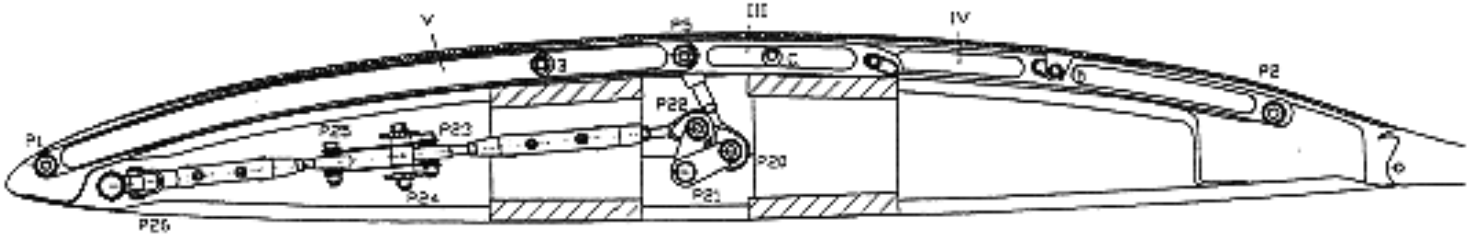

ALDI Airfoil, 1995
Akaflieg Braunschweig

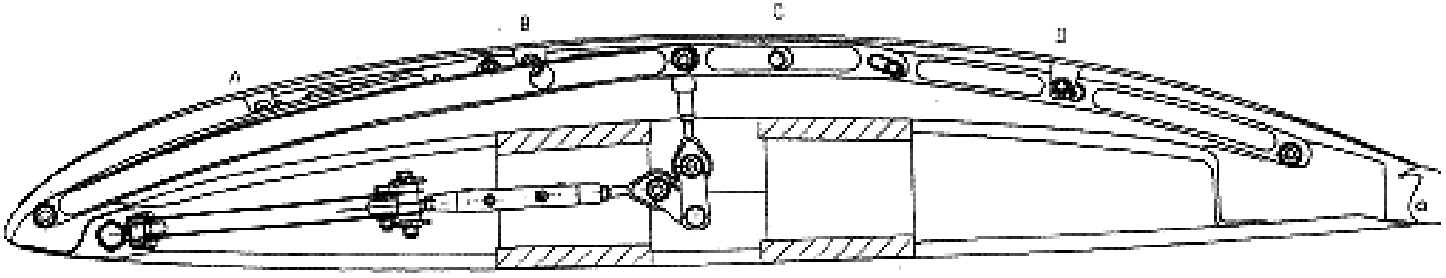

The SB 13
Akaflieg Braunschweig

Idaflieg Summer Meeting

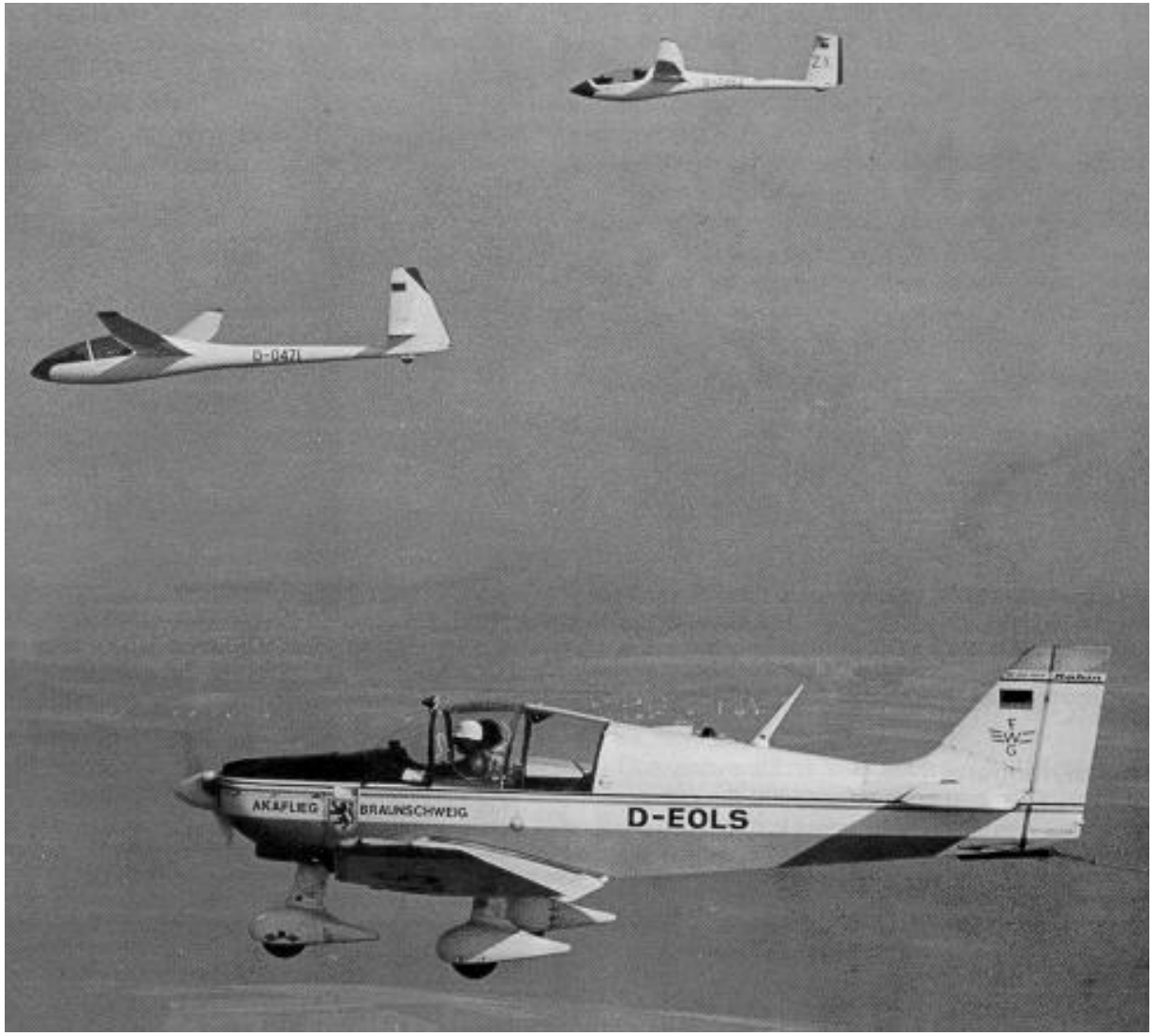

History and Background

Previous efforts in U.S.
PSU honors course, 1988
EXCEL initiative, 1992

Past Activities

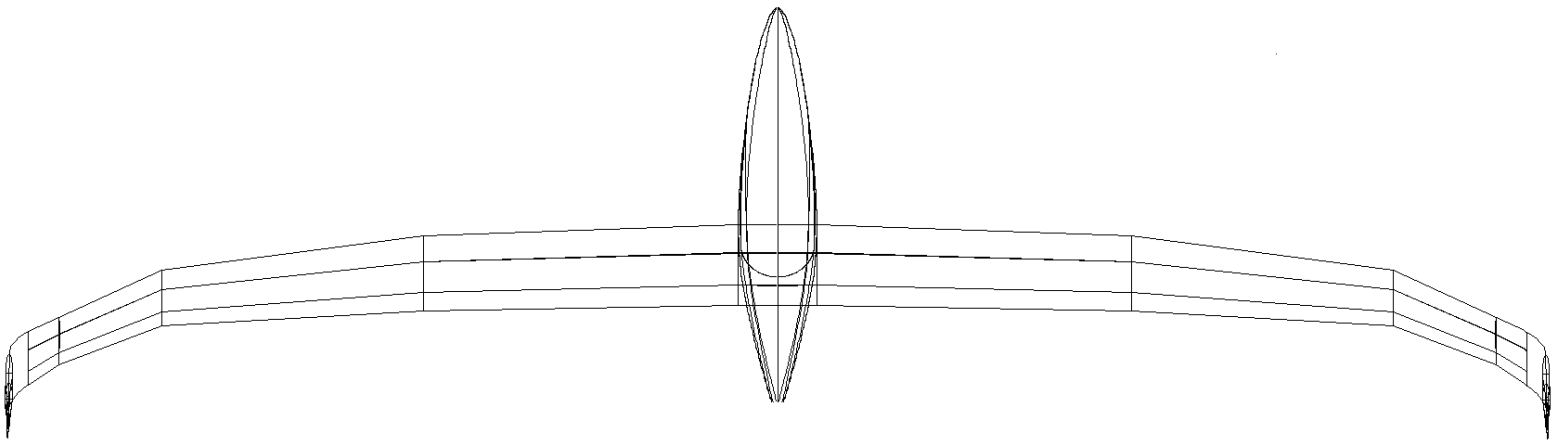

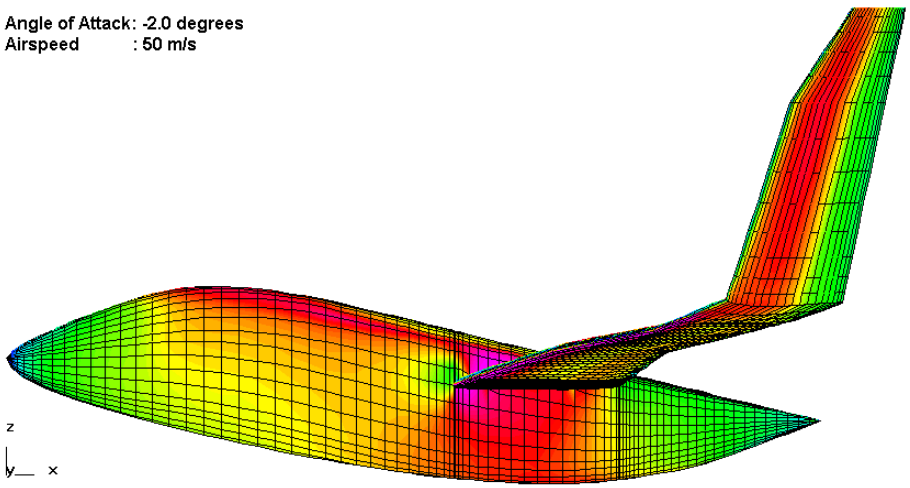

“Paper Studies”
The Griffin
The Falcon
The “Easy Build” Glider
Radio-Controlled Models
Load Testing
Design Competitions

The Griffin

American Falcon

The “Easy Build” Glider

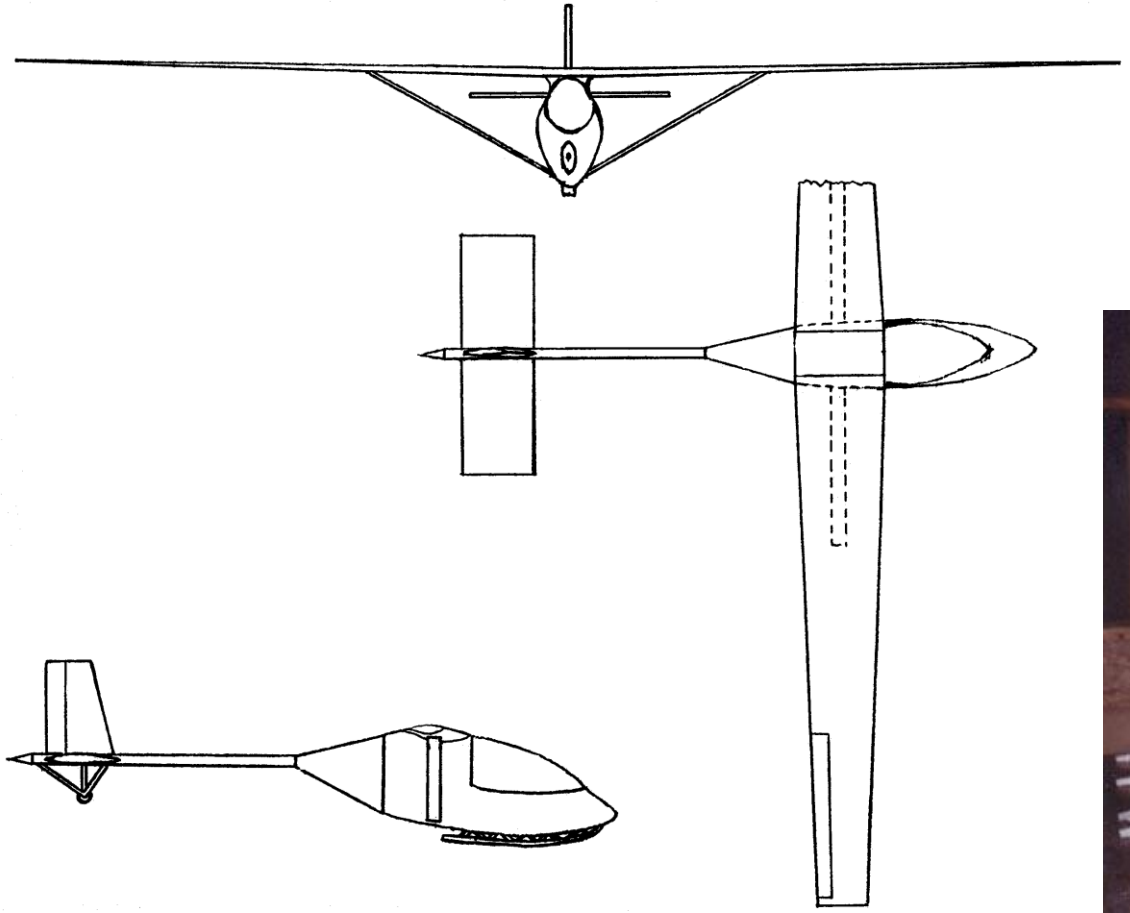

Primary Glider – Auto Tow

Mov04392.mpg
6 - 24

Radio-Controlled Models

Full-Scale Sailplane Load Test