MicroMAPS – A Model for NASA Engagement of Space Grants in Research

Vickie Connors
Science Missions Division
NASA Langley Research Center
Hampton, VA 23681

14 September 2006

NASA Space Grant Mid-Atlantic Regional Meeting
University of Virginia
Charlottesville, VA

I had an idea, and an instrument needing a new mission.

Mary Sandy, as Director of Virginia Space Grant, has a network of member universities, with supporting industrial and technical partners, enabling research opportunities for professors and students, and tremendous funding leverage.

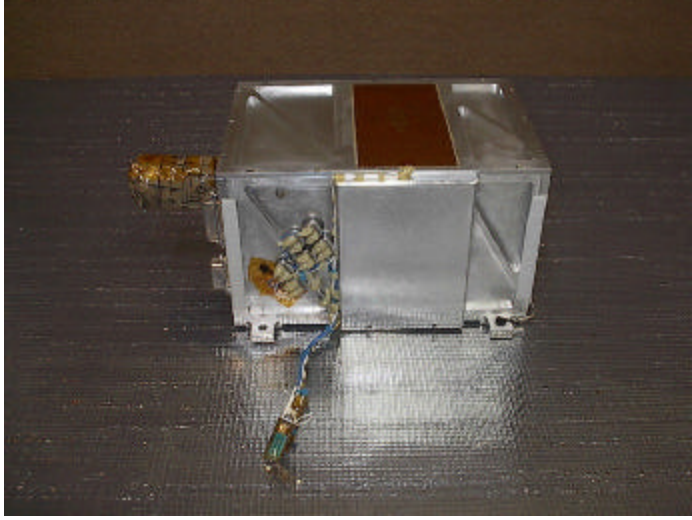

All I had to do was gather the courage to meet her and pitch the idea for us to develop a partnership….

this period took the most time of any phase of our project.

Partnership can be defined as:

A relationship between individuals or groups that is characterized by mutual cooperation and responsibility, as for the achievement of a specified goal.

Funding for this research is gratefully acknowledged as coming from NASA/ Science Mission Directorate under NRA -02-OES-06 in support of AURA Validation

Our Goal

Develop a new research mission for MicroMAPS that:

1) ***engaged a cooperative team of Virginia universities (professors and students), through VSGC who***

2) ***work with engineering and scientific personnel at NASA LaRC,***

3) ***in a timeframe that is relevant for a typical graduate student***

So…what **attributes** did we think we need?

- Clear Communication
- Tenacity
- Commitment
- Trust
- Sense of humor
- Experienced Core Team
- Flexibility
- Attitude: “success is the only option”
- Funding: $100K start-up,
  - NASA-funded proposal $192K for procurement

Key Milestones

1996-1999

- MicroMAPS designed and built in support of NASA Small Spacecraft Technology Initiative; tested and integrated on Clark spacecraft; mission cancelled (1997) and payload stored at NASA GSFC. Instrument PI's retire from NCSU.

2000

- MicroMAPS removed from Clark Spacecraft; delivered to LaRC (May 2000)
- Connors on detail as NASA HQ Program Manager (Trop Chem) 1999-2001
- VSGC hires research program director

2001

- Connors returns to LaRC and assigned responsibility for MicroMAPS
- Mary Sandy and John Companion (VSGC) and Connors draft partnership plan (start up funds $100K)
- Preliminary meeting with candidate participants (UVA, ODU, VPI) to plan project
- **Phase I**: Explored Issues for New Space Mission; **ODU** – Engineering Feasibility Study (launch opportunities, engineering issues, education activities/application possibilities); **VPI** – Spacecraft design; UVA – Development of theoretical models of atmosphere and instrument (radiative transfer models) and Calibration – Engineering performance; LaRC – Identify issues related to engineering documentation for testing and operating MicroMAPS, drawings, data acquisition.

2002 Key Milestones

- **LaRC** – Build team; Develop engineering documentation for testing and operating MicroMAPS, Design computer interface and communication between instrument and data acquisition system; Design new data acquisition system; Submit proposal to NRA-02-OES-06.
- **ODU** - *O. Abdelkhalik, B. Nairouz, T. Weaver, and B. Newman: "Engineering Feasibility and Trade Studies for the NASA/VSGC MicroMAPS Space Mission", ODU, Dept Aerospace Engineering, Final Report: Dec 2002*
- **VPI** - *C. Hall, senior student design team, "Virginia Satellite for Carbon monoxide Analysis and Tabulation VASCAT – MicroMAPS Host Satellite Design Proposal", VPI, Aerospace and Ocean Engineering Dept, 27Aug 2002.*
- **UVA** – Functional Test procedure developed, written and revised (UVA students); Begin development of theoretical models of atmosphere and instrument via mentoring of two undergraduate mechanical engineering students; analyzed prototype radiative transfer calculations, explored MATLAB, HITRAN database, LBL RTM.
- **LaRC** - Functional Test at LaRC (Resonance Ltd, UVA students, VSGC, NASA) Aug02; Performance evaluated; 1996-7 MacIntosh data acquisition system used for test; Instrument operated as designed. Proposal developed for Phase 2 activities.

Phase 1 reports showed no near-term space flight opportunities, so we shifted our goal from low earth orbit - spacecraft to high altitude airborne platforms.

2003 Key Milestones

- **SC**: Met with Scaled Composites to explore possibility of flying an integrated system on the Proteus and identify schedule or sub-contract issues(8Dec02 : VSGC, LaRC, SC)
- Proposal selected for funding
- **VSGC** let sub-contract to Scaled Composites to fabricate nacelle for MicroMAPS pod (Connors required nacelle conform to existing nose pod geometry as much as possible to minimize size and to streamline fabrication, cost, schedule, and shipping contingencies)
- **ODU**: *O. Abdelkhalik, B. Nairouz, T. Weaver, and B. Newman,: Engineering Feasibility and Trade Studies for the NASA/VSGC MicroMAPS Space Mission, ODU, Dept Aerospace Engineering, Final Report: NASA/CR-2003-212652, Sep 2003* ;
- VPI and UVA continue involvement in Phase 2 of project:
  - **VPI**: *C. Hall and W. Mason, AOE 4065 Aircraft and Space Design Student Team, " MicroMAPS: From Storage to Flight", VPI, Dept of Aerospace and Ocean Engineering, 6Dec02.*
  - **UVA**: Continued development of theoretical models; revised models and process.

2003 Fall AGU Meeting:

- "*MicroMAPS Missions for CO Detection: An Ongoing Undergraduate Research Project - A Theoretical Model for Reducing MicroMAPS Data from High Altitude Research Platform Proteus*," P.E. Hopkins and S.A. Tangen, Mechanical and Aerospace Engineering, UVA; Professors R.J. Ribando and H.G. Wood, Mechanical and Aerospace Engineering, UVA, and V.S.Connors, NASA Langley Research Center
- *"The MicroMAPS Project: A NASA – Virginia Space Grant Consortium Initiative,"* V. S. Connors, H. Reichle, Jr., W. Morrow, J. Companion, M. Sandy, C. Hall, H. Wood, and R. Ribando

2004 Key Milestones

Proposal Funding arrives Feb04; INTEX-A augmentation funding arrives in Jul04

- **LaRC**: Review and revise VPI-design of instrument system; after preliminary testing, replaced SC-provided ¼" aluminum plate and pressure-relief valve with ½" aluminum plate and space-qualified pressure relief valve; develop wiring harnesses; design, test, and build data acquisition system and commanding software; develop pilot – payload interface; integrate and test MicroMAPS instrument system and ship to SC, Mojave (May04); ASRB review conducted.
- June: Flight Test
- July: INTEX-A based at Langley AFB/NASA Langley Research Center
- Aug-Sep :Science campaigns for satellite validation in Italy: Aerosol Direct Radiative Impact Experiment (ADRIEX) and England - European AQUA Thermodynamic Experiment (EAQUATE) funding for Proteus payload by IPO, campaign sponsored by Facility for Airborne Atmospheric Measurements (FAAM)

- **SC**: Revise optical window mounting fixture, add second gasket layer between plate and pod; seal pod; mount on Proteus; test on ground; flight test 12Jun04

- **NOAA/CMDL**: Coordinated underflight of Proteus over Catalina Island/Pacific (Novelli/CMDL)

- **UMD**: Conducted lower tropospheric flights during INTEX-A in vicinity of NASA DC-8 and Proteus

- **UVA**: Radiative transfer modeling continues; sensitivity function for "MicroMAPS on Proteus" flights completed; Student continues work at LaRC via 2004 LARSS program; supports test flight in Mojave and INTEX-A science campaign by evaluating instrument performance, analysis of in-flight functional tests, and data management; ***LARSS Report***: *"Development of an Infrared Radiative Transfer Model for Interpretation of MicroMAPS Data* . UVA students graduate; Patrick Hopkins continues to work with MicroMAPS project as UVA/Mechanical Engineering graduate student; draft manuscript developed.
- **VSGC: 2004 VSGC Annual Research Forum "***MicroMAPS Missions for CO Detection, "*P. E. Hopkins and R. J. Ribando, Dept Mechanical and Aerospace Engineering, UVA

Scaled Composites – More than a Contractor
Another Partner in the MicroMAPS success story

Before integrating MicroMAPS onto Proteus, the Nacelle needed a little extra load to provide uniform pressure so Jon Marion could properly tighten bolts…Vickie Connors went on a diet immediately following the test flight. Jon Marion, Don Oliver, and Dan Norfolk is shown enjoying her discomfiture.

Don Oliver (NASA), Mike Alsbury(SC), Chuck Coleman (SC), Neil Coffey (NASA), Dan Norfolk (NASA), Jon Marion (SC), and Patrick Hopkins (UVA) gathered for group photo on test flight day June 12, 2004

After Proteus leaves Mojave and heads for the Pacific Ocean and the Salton Sea
12 June 2004

The MicroMAPS team must wait patiently back at Hangar 77 until Proteus returns to see how well the system performs

MicroMAPS on Proteus during INTEX-NA July 2004 Campaign

Patrick Hopkins (UVA Mechanical Engineering student) joined MicroMAPS-VSGC partnership as undergraduate student in 2002 and provides the radiative transfer component to the project.

Mike Melvil was one of the pilots flying Proteus during all four of the Science Missions (2004: INTEX, ADRIES, EAQUATE, and 2006: TWP-ICE

2005 Key Milestones

- **Resonance Ltd, Barrie, Canada**: Hosted calibration of MicroMAPS instrument system as flown on Proteus in 2004 (June05)

- **UVA**: Flight data from three campaigns organized and archived by Mr. Hopkins; theoretical calculations continue; support calibration of 2004 MicroMAPS instrument system; analyze calibration data; incorporate calibration data into data retrieval strategy; data retrieval process tested – more refinement needed.

- **VSGC**: supported MicroMAPS calibration by funding travel for Hopkins & Reichle; enabled procurement of supplies (dry ice, miscellaneous consumables); **2005 VSGC Annual Research Forum "***Engineering Assessment of the MicroMAPS Instrument during the Proteus Flights,***"** P.E. Hopkins, V.S. Connors, and R.J. Ribando

- **LaRC**: Presented *"MicroMAPS Status and Initial NAST-I retrievals for INTEX-NA"* to INTEX-A Science Team at VA Beach meeting; Invited to participate in TWP-ICE with DOE Sandia Lab; ASRB and export control forms processed; Test flight in Mojave 1-2Dec; State Dept export documents processed in Dec; Develop deployment staffing and shipping plans.

Prepare for Tropical Warm Pool – International Cloud Experiment TWP–ICE:

Modified instrument system (thermal isolation of MicroMAPS from baseplate; replace fairing gasket; install thermal blanket to instrument; Upgrade timing mechanism in data acquisition system; modify command-control system to be compatible with developed for trans-Pacific - Australia flights.

MicroMAPS Averaging Kernel for CO Cells

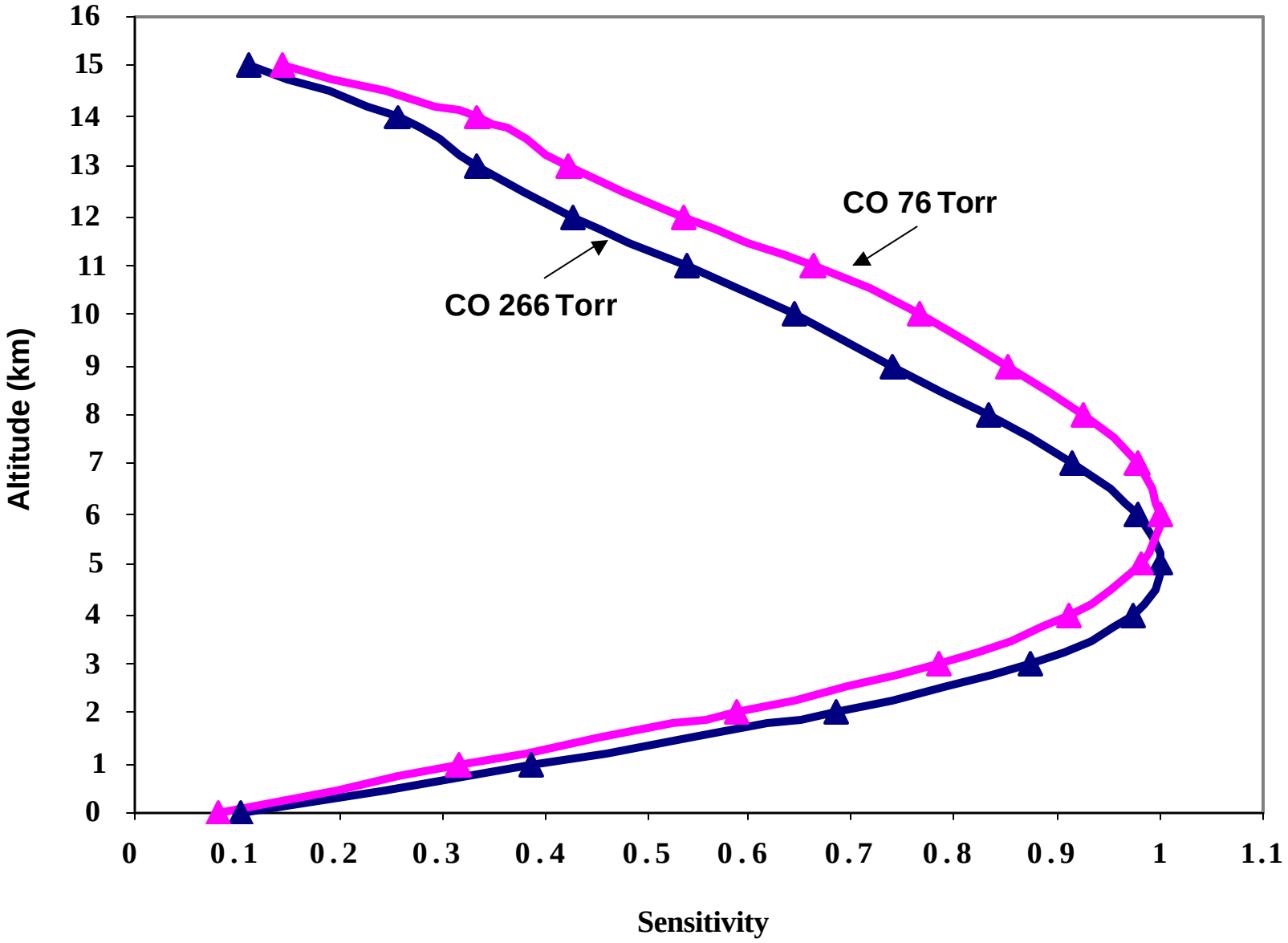

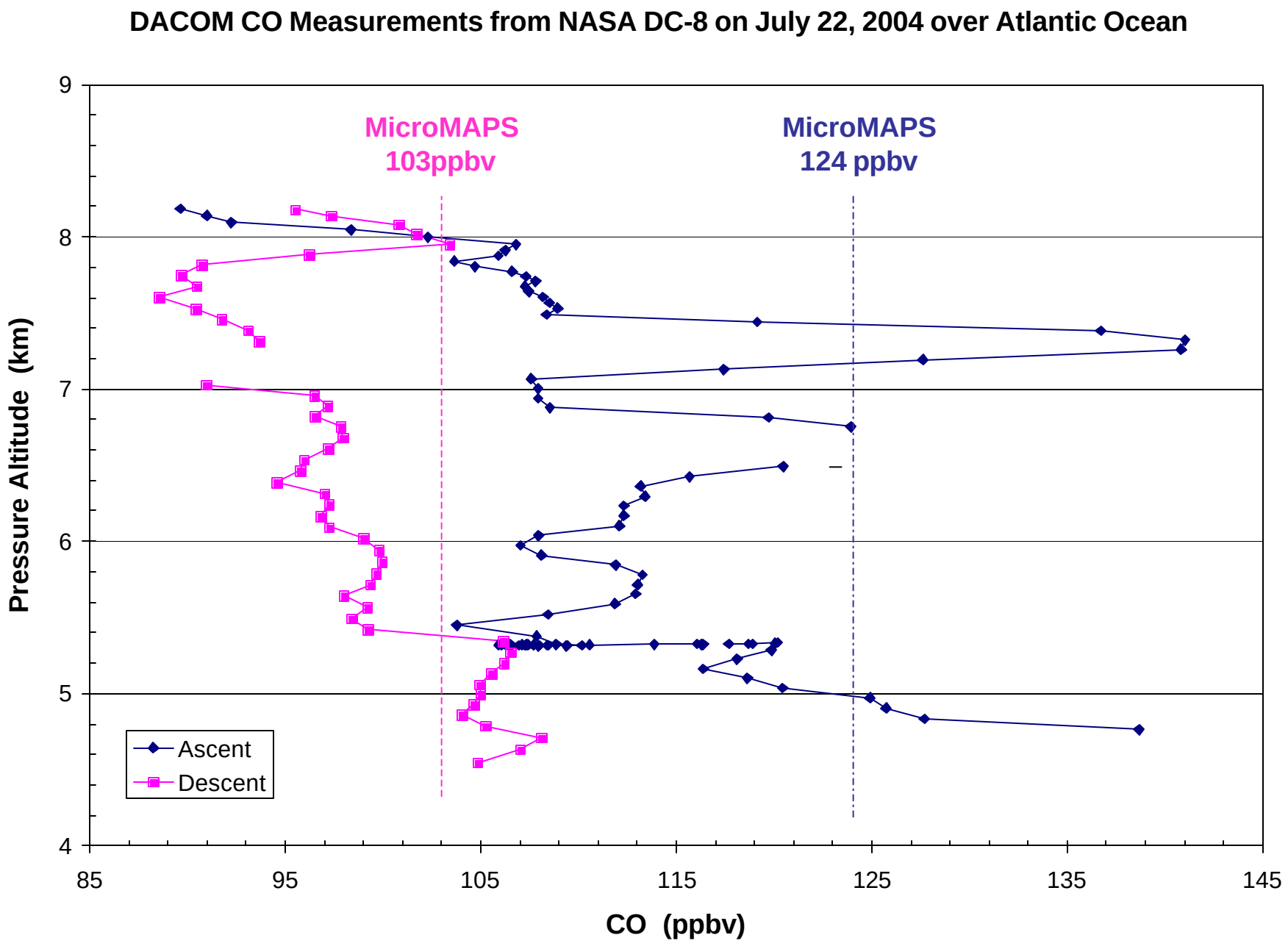
DACOM CO Measurements from NASA DC-8 on July 22, 2004 over Atlantic Ocean
MicroMAPS
103ppbv
MicroMAPS
124 ppbv
Ascent
Descent
Pressure Altitude (km)
CO (ppbv)
9
8
7
6
5
4
85
95
105
115
125
135
145

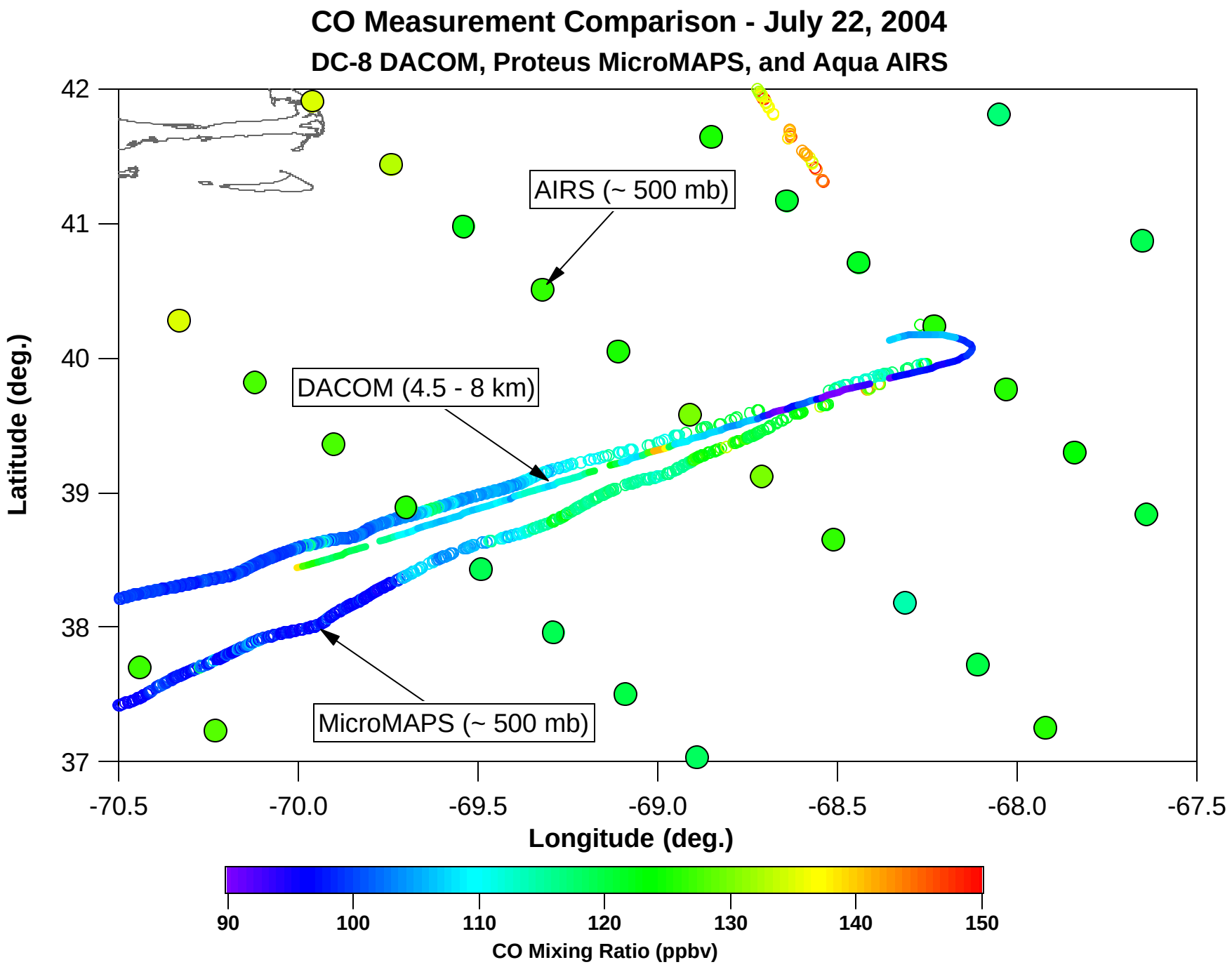
CO Measurement Comparison - July 22, 2004
DC-8 DACOM, Proteus MicroMAPS, and Aqua AIRS
AIRS (~ 500 mb)
DACOM (4.5 - 8 km)
MicroMAPS (~ 500 mb)
Latitude (deg.)
42
41
40
39
38
37
-70.5
-70.0
-69.5
-69.0
-68.5
-68.0
-67.5
Longitude (deg.)
90
100
110
120
130
140
150
CO Mixing Ratio (ppbv)

Proteus landing at RAF Base in Darwin

Proteus over Darwin, Australia during TWP-ICE

2006 Key Milestones

- **LaRC/UVA/Reichle:** Data retrieval process reviewed, tested, revised, analyzed, and after 4 years of effort, accepted as ready for 2004 science flights
- **LaRC/SC:** TWP-ICE campaign with DOE-Sandia Lab; payload flown in UAV-mode; many lessons learned!
- **UVA**: **Complete retrieval for 2004 MicroMAPS on Proteus flights**; Develop tropical model and incorporate in data retrieval strategy for TWP-ICE data set.
  - **2006 VSGC Annual Research Forum** "Carbon monoxide and sea surface retrieval algorithm for MicroMAPS missions," P.E. Hopkins, V.S. Connors, M. Pippin, and R.J. Ribando
- **LaRC/UVA**: Analyze data and archive to appropriate data bases for each campaign; submit manuscript soon.
- Present data to AURA Science Team (Sep), 2006 Fall AGU Meeting (Dec), 87th AMS Annual Meeting/Ninth Conference on Atmospheric Chemistry (Jan07)

Phase 2 completed

What's Next?:

- New proposal to further analyze science data – due 31Oct06
- Develop proposal to fly MicroMAPS instrument system as a true "UAV" payload or on low earth orbit spacecraft – looking for open solicitation

VPI: *"Feasibility and Planning Studies for a Systematic Approach to the Migration of the MIcroMAPS Instrument Package from Proteus to a UAV Platform," VSGC Project #144991, 20May05*

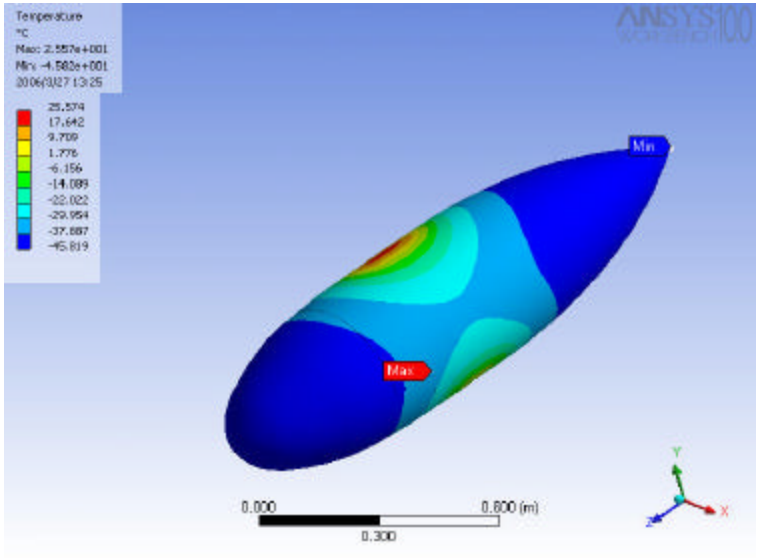

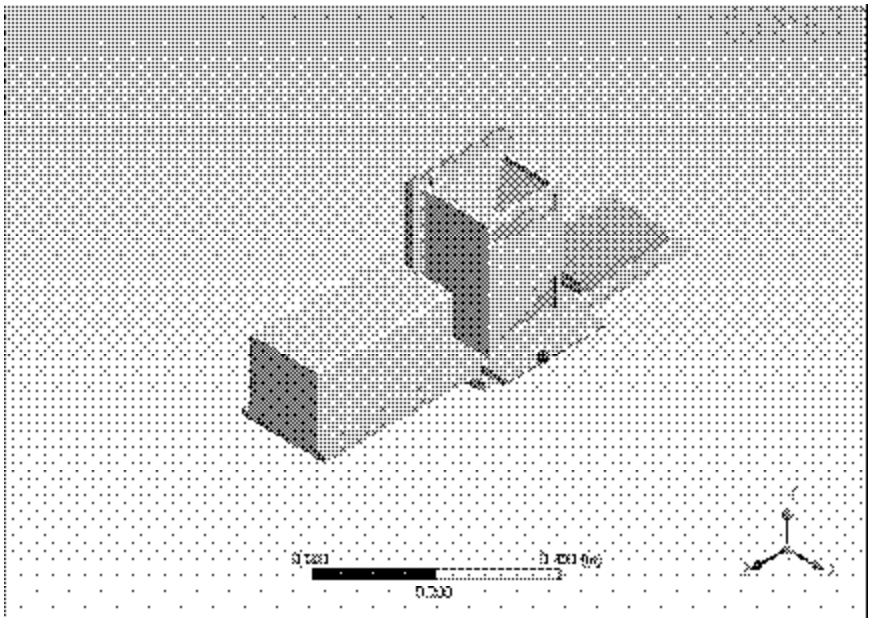

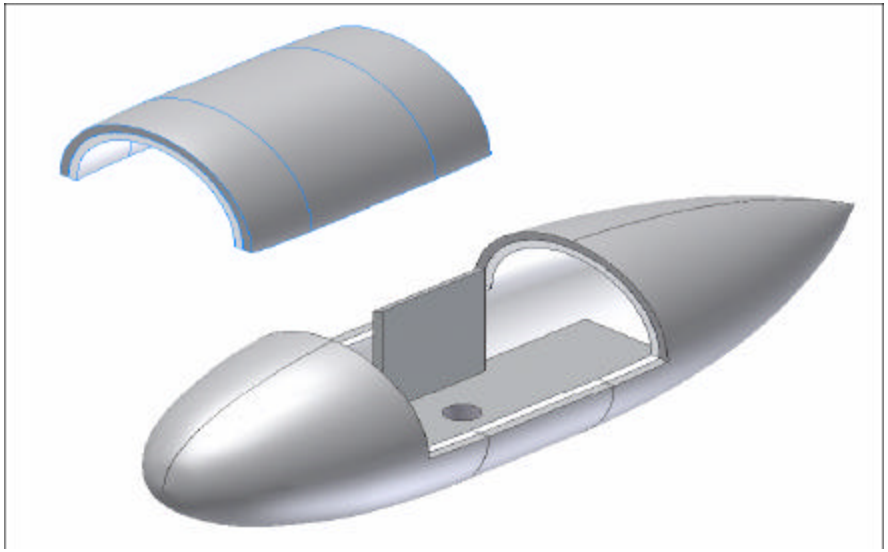

Possible Low Earth Orbit Launch on Minotaur from Wallops Flight Facility

Payload Accomodations:
• Standard 50 in. Pegasus-design payload fairing
supports dedicated or shared launch missions
• Thermally controlled fairing with Class 100K standard cleanliness
• Well defined launch environments
• Variety of proven payload separation systems
available
• Optional 61 in. fairing available

Challenges in Our Partnership

- Culture: University Aerospace Engineering culture wanted defined pathway for research (a recipe) BUT the reality of atmospheric science research is that the path and end result are generally unknown; the research is an evolving journey.
- NASA Issues ← *evolving corporate identity*
  - Proposal – Selection – Funding timeline too lengthy, uncertain, effort and staffing de-scoping, budget reductions; funding to LaRC late so funding to partners later
  - Difficult to sustain partnerships – last 2 years of effort UMD and NOAA partners were unfunded so grants ended without full benefit of effort
  - NASA corporate paradigm in transition: Full Cost Accounting, HQ changed from Office of Earth Science(2002) to Science Mission (2005) with diluted focus on earth atmosphere, LaRC Staff downsizing (slow down in procurements, grant processing)
- Communication: ←Better focus the problem, + More time spent between MicroMAPS Core team and students, Better/More useful the resulting effort
  - Multiple groups, dispersed locations, diverse schedules & priorities, varying access to videoconferencing systems;
  - Connors wanted university teams to conduct genuine research efforts while some teams expected “directed” efforts (aerospace research vs atmospheric science research); wanted more direct interaction with students while some professors preferred to be “gate keeper” to student access;
  - Visits @ LaRC by students, Visits @ UVA, ODU, and VPI by MicroMAPS team members but needed more; LARSS; ODU GIS project –Stennis/VSGC

Professor Bill Mason and MicroMAPS Student Team Fall 2005 Visit to NASA LaRC

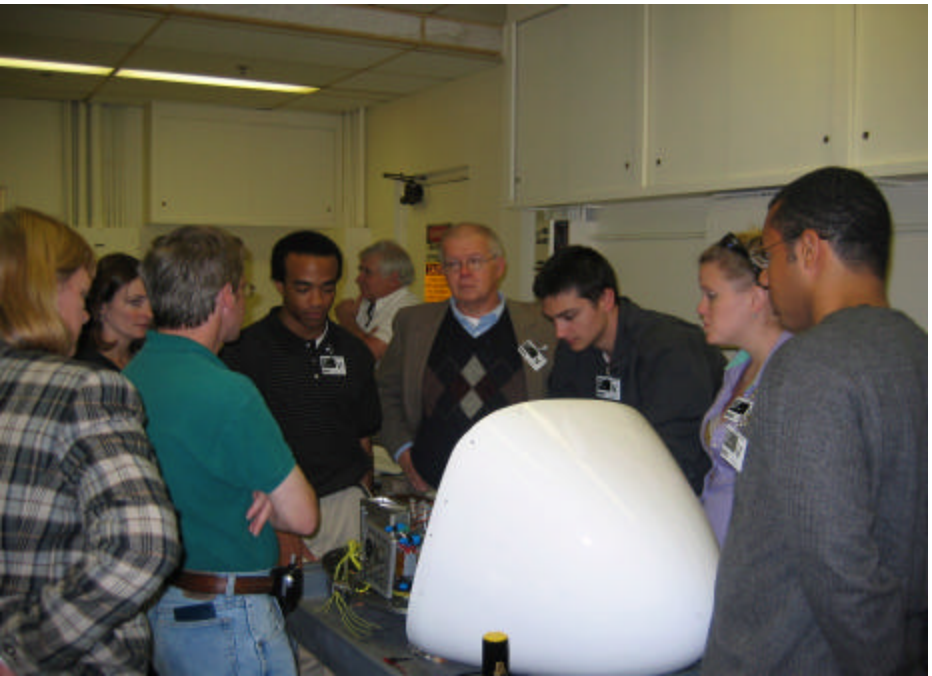

Attributes that Contributed to Our Partnership Success

- **Determination – Passion – Commitment - Trust - Sense of humor**
- **Flexibility** (in funding, scheduling, communicating, traveling, new projects)
- **Being open to finding new ways to solving tough problems**
- **Experienced Core Team**
- **Awareness of individuals' strengths, weaknesses, and tendencies** (sometimes we really did need to stop, take a moment to eat, or rest…other times we really did need to push hard)
- **Strong Commitment and Dedication to providing best research experience possible to widest number of students (both undergraduate and graduate) as possible on the part of all team members**
- **Willingness to improve processes** (communication, data flow, working in the field, etc)
- **"We can make this work," " We can make this happen" attitude. Success-oriented, absolute refusal to fail. If VSGC is your partner, Success is the only option.**

Thank You!

- **NASA LaRC**: **Don Oliver, Neil Coffey, Dan Norfolk**, Anna Noe, Richard Foss, John Barrick, Vic Delnore ,Glen Sachse, Dan Zhou, Gao Chen, Margaret Pippin, Dave Young, Dee Poupard
- **Virginia Space Grant Consortium**: **Mary Sandy, John Companion**, + staff
- **NOAA/ CMDL: Paul C. Novelli**, Aaron Watson
- **NASA LaRC** retired: **Henry G. Reichle**, Jr., Gerald Walberg, Tommy Lefel, Richard Bendura, Jim Hoell
- **Resonance Ltd**: **Bill Morrow**, Carmen Arguis, Carol Gordon
- **Scaled Composites**: **Michael Alsbury**, Brian Binnie, Michael Melvill, Charles Coleman, Rick Aldrich, Jon Marion
- **Virginia Polytechnic Institute and State University,** Aerospace and Ocean Engineering

  Faculty: Christopher D. Hall and William H. Mason

  Students:

Michael P. Belcher	Ann W. Berquist	Thomas Haney	Mike Tuttle
Ludovic Burton	Joseph G. Bidwell	Evan Lortie	Stephanie Shamblin
Adam Dubinskas	Kevin D. Earl	Binh Tran	Christine R. Rogers
Liam Flemming	Brian Gardner	Megan Watson	Monsid Poovatana
Connor Haines	**Douglas Hillson**	Steve White	Matthew C. VanDyke
Arthur Jarjisian	Leslie Johnson	**Charles Walston**	Daniel Pedraza
Rivers Lamb	Scott E. Lennox	Josh Zhou	David Simon
Jennifer Lin	Tyler McCall	Richard G. Winski	Christopher Nickell
Lee McCoy	Shan Mohiuddin	Whitney Waldron	

- **University of Virginia**, Department of Mechanical and Aerospace Engineering Faculty:
  Faculty: Gaby Laufer, Bob Ribando, Houston Wood;
  Students: Clayton Nunnally, **Patrick Hopkins**, Steve Tangen, Kristen Forbes,
  Thomas C. Jones, Catherine Roodhouse + new Fall 2006 student

- **Old Dominion University, Dept of Aerospace Engineering:**
  Faculty: Brett Newman, Thomas Albert, Ayodeji Demuren, Keith Williamson
  Students: Ossama Omer-Abdelkhalik, Jennifer Ammentorp, Stargel Doane, Roland Escobar, Everett Harris, Erik Tyler, Bob Race, David Reed, Kapseong Ro, Bassem Nairouz, Timothy Weaver, Jamie Zahorian

- **Stennis/VSGC GIS:** Tom Allen, ODU **Student:** James Collins

- **University of Maryland, College Park:**
  Faculty: Bruce G. Doddridge and Lackson Marufu
  Students: Jennifer Hains and Brett Taubman

- **Science and Technology Corporation:** Peggy McCloud
- **Hampton University:** Bill Smith • **Swales Aerospace:** Mauro Rana
- **University of Maryland, Baltimore County:** Wallace McMillan and Juying Warner
- **University of Wisconsin:** Dan LaPort • **MIT Lincoln Lab:** Vincent Leslie
- **DOE Sandia Lab- Livermore CA:** Tim Tooman, Bob McCoy, John Smith, Ken Black
- **2006 Governor's School Student, NASA LaRC:** Donald Brooks

- **Virginia Polytechnic Institute and State University, Aerospace and Ocean Engineering**

- Faculty: Christopher D. Hall and William H. Mason

- Students:

Michael P. Belcher	Ann W. Berquist
Ludovic Burton	Joseph G. Bidwell
Adam Dubinskas	Kevin D. Earle
Liam Flemming	Brian Gardner
Connor Haines	**Douglas Hillson**
Arthur Jarjisian	Leslie Johnson
Rivers Lamb	Scott E. Lennox
Jennifer Lin	Tyler McCall
Lee McCoy	Shan Mohiuddin
Christopher Nickell	Daniel Pedraza
Monsid Poovatana	Christine R. Rogers
David Simon	Binh Tran
Mike Tuttle	Matthew C. VanDyke
Whitney Waldron	Richard G. Winski
Josh Zhou	**Charles Walston**